TERRACOTTA DESIGNS
ARTISAN LIGHT. TIMELESS SOUL

PRODUCT SPECIFICATION SHEET

Valentina Sconce

PRODUCT VIEW



DIMENSION VIEW

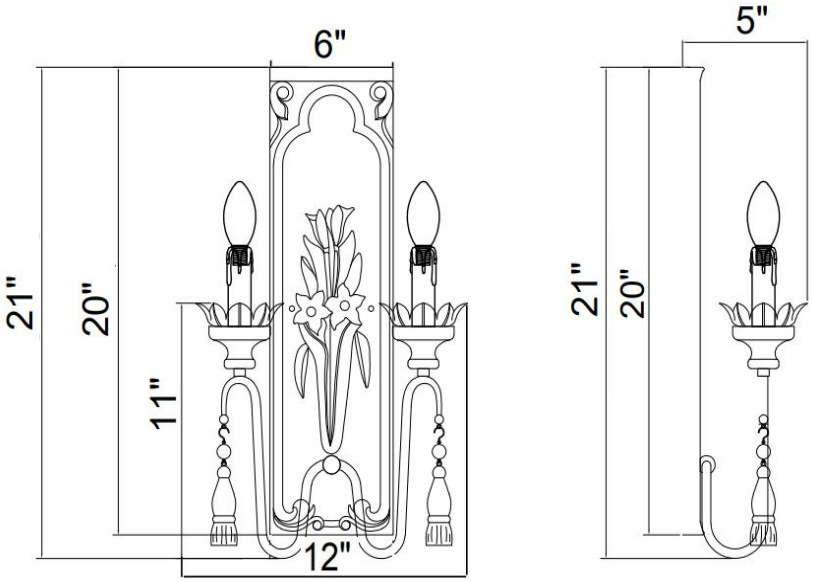

SPECIFICATIONS

SKU	W5204-2
DIMENSION	12”W x 5”D x 21”H
MATERIALS	Iron & wood
FINISH	Antique Fresco Patina
SOCKET & BULBS	2 x E12
WATTS PER SOCKET/ITEM	40 W / 80 W
BACKPLATE COVER	6”Dia x 20”H
WIRE/CHAIN	N/A
NET WEIGHT	4 LBS

Antique Fresco Patina:A layered blend of chalky limestone, sunbaked ochre, and softly burnished gold. This finish evokes the aged surface of a faded wall fresco—elegant, weathered, and touched by centuries of Provençal light.

NOTE:

- Safety Rate: UL/ETL Dry. It is for indoor use only
- Some Assembling work is required. Please follow the instructions.
- Professional installation recommended. Dimmable with compatible bulbs/dimmer.