TERRACOTTA DESIGNS
ARTISAN LIGHT. TIMELESS SOUL

PRODUCT SPECIFICATION SHEET

Jaima Crest Sconce

PRODUCT VIEW



DIMENSION VIEW

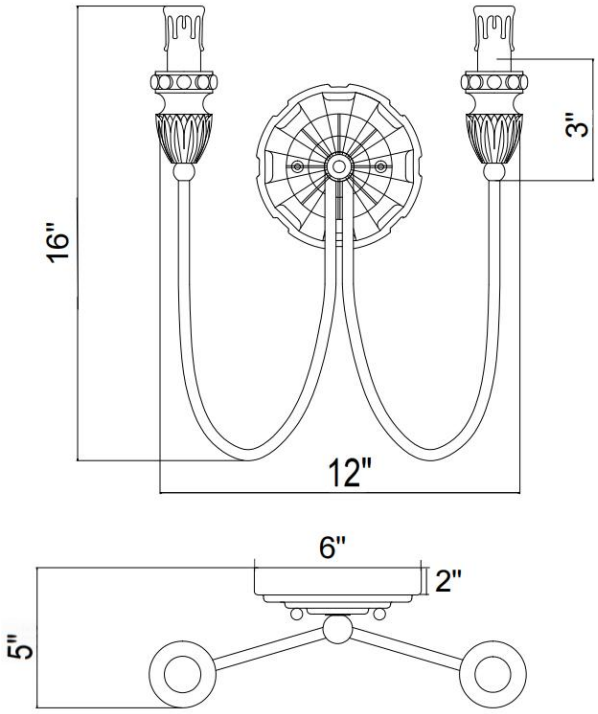

SPECIFICATIONS

SKU	W8250-2
DIMENSION	12”W x 5”D x 16”H
MATERIALS	Iron & Wood
FINISH	Golden Garden Patina
SOCKET & BULBS	2 x E12
WATTS PER SOCKET/ITEM	40 W / 80 W
Backplate	6” Dia x 2”H
WIRE / CHAIN	N/A
NET WEIGHT	2 LBS
ADJUSTABLE HEIGHT	N/A

NOTE:

- Safety Rate: UL Dry. It is for indoor use only
- Minimum Assembling work is required. Please follow the instructions.
- Professional installation recommended. Dimmable with compatible bulbs/dimmer.