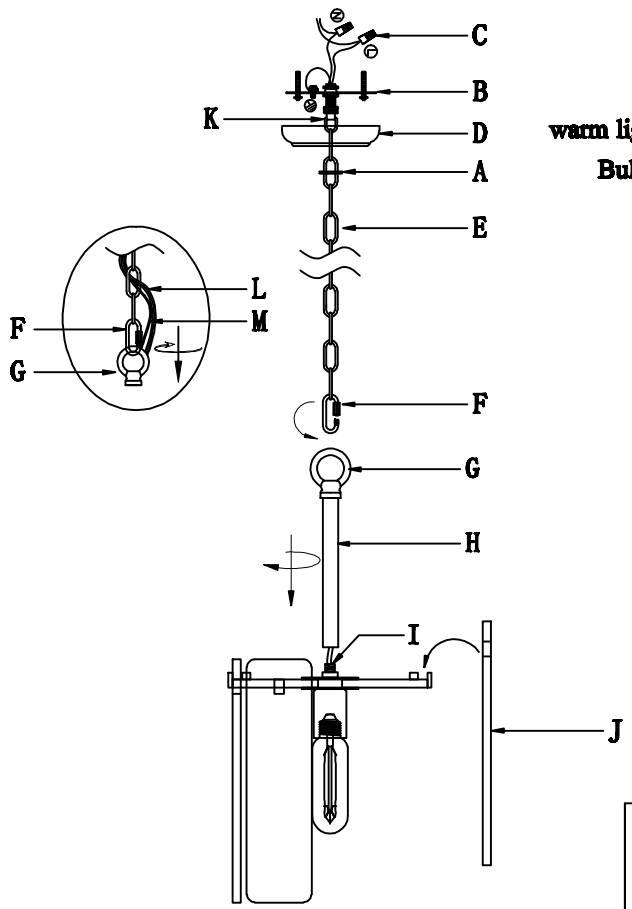

E26

warm light recommended

Bulb(Not Included)

Spare parts

J

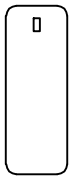

1PC

KCH5160P-10

J

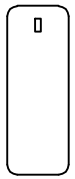

9PCS

Assembly Instructions

WE RECOMMEND INSTALLATION OF THIS LIGHTING FIXTURE BE DONE BY A LICENSED ELECTRICIAN.
WARNING * SWITCH OFF THE MAIN ELECTRICAL SUPPLY FROM THE MAIN FUSE BOX/CIRCUIT BREAKER BEFORE INSTALLATION.**

1.Carefully remove all parts from the box
2.Remove the mounting bracket (B) from the canopy (D) by loosening the screws (A)
3.Taking off the open ring (F) and use the dimensions of the fixture as a guide, shorten the chain (E) as needed using a pair of chain pliers.
4. Link the centre pole (H) and screw nipple (I) together
5.Use the open ring (F) to link the chain (E) and the loop (G), then put the cable(L) and naked earth cable (M) through the chain(E) in every 3-4 rings until through the ceiling loop (K).
6.INSURE THE ELECTRICITY SUPPLY IS TURNED OFF
7.Affix the mounting bracket (B) on the outlet box
8.Wrap both safety cable with nipples (C) , push the cable into the outlet box.
9.Attach the canopy (D) to the mounting bracket (B) and secure with lock collar (A)
10. Install the bulbs (NOT INCLUDING) on the sockets, and then install glass plaques(J) on the lamp body according to the illustration.
11. Installation is complete, turn on power at fuse or circuit breaker.
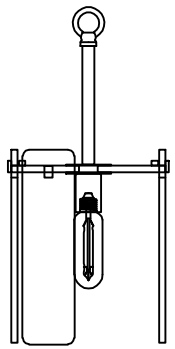
Clean with a dry, soft cloth only. Use no harsh abrasives or chemical agents